LMC6953 PCI Local Bus Power Supervisor

Check for Samples: LMC6953

FEATURES

- **Compliant to PCI Specifications Revision 2.1.**
- **Under and Over Voltage Detectors for 5V and 3.3V**
- **Power Failure Detection (5V Falling Under 3.3V by 300 mV Max)**
- **Manual Reset Input Pin**
- **Specified $\overline{\text{RESET}}$ Assertion at V_{DD} = 1.5V**
- **Integrated Reset Delay Circuitry**
- **Open Drain Output**
- **Adjustable Reset Delay**
- **Response Time for Over and Under Voltage Detection: 490 ns Max**
- **Power Failure Response Time: 90 ns Max**
- **Requires Minimal External Components**

APPLICATIONS

- **Desktop PCs**
- **PCI-Based Systems**
- **Network servers**

DESCRIPTION

The LMC6953 is a voltage supervisory chip designed to meet PCI (Peripheral Component Interconnect) Specifications Revision 2.1. It monitors 5V and 3.3V power supplies. In cases of power-up, power-down, brown-out, power failure and manual reset interrupt, the LMC6953 provides an active low reset. $\overline{\text{RESET}}$ holds low for 100 ms after both 5V and 3.3V powers recover, or after manual reset signal returns to high state. The external capacitor on pin 8 adjusts the reset delay.

This part is ideal on PCI motherboards or add-in cards to ensure the integrity of the entire system when there is a fault condition. The active low reset sets the microprocessor or local device in a known state.

The LMC6953 has a built-in bandgap reference that accurately determines all the threshold voltages. The internal reset delay circuitry eliminates additional discrete components.

Typical Application Circuits

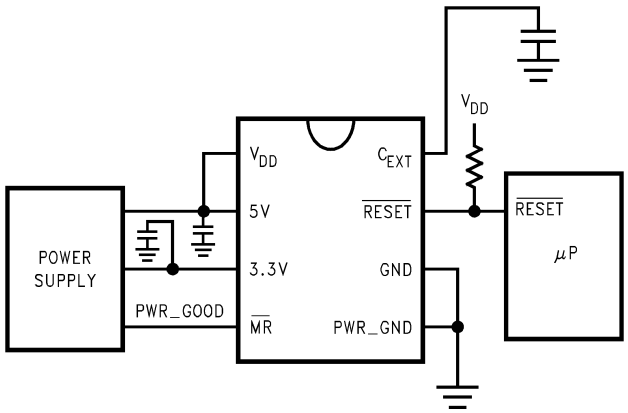

Figure 1. On Mother Board

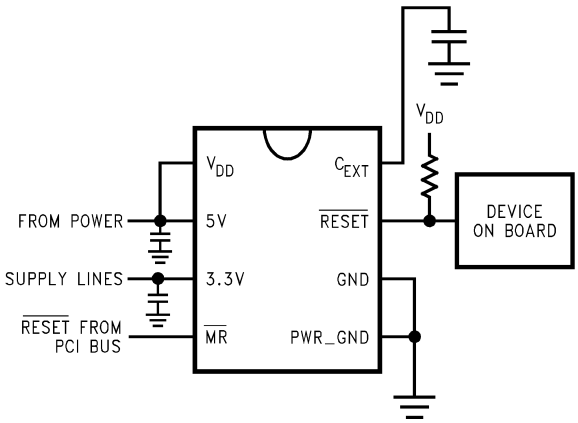

Figure 2. On Add-in Cards

Please be aware that an important notice concerning availability, standard warranty, and use in critical applications of Texas Instruments semiconductor products and disclaimers thereto appears at the end of this data sheet.

All trademarks are the property of their respective owners.

PRODUCTION DATA information is current as of publication date. Products conform to specifications per the terms of the Texas Instruments standard warranty. Production processing does not necessarily include testing of all parameters.

Copyright © 1998–2013, Texas Instruments Incorporated

Connection Diagram

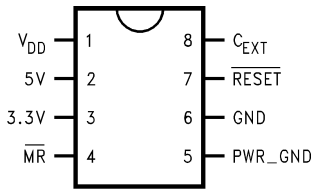

Figure 3. 8–Pin SOIC Top View

These devices have limited built-in ESD protection. The leads should be shorted together or the device placed in conductive foam during storage or handling to prevent electrostatic damage to the MOS gates.

ABSOLUTE MAXIMUM RATINGS[1][2]

ESD Tolerance [3]	
Human Body Model	2 kV
Machine Model	200V
Voltage at Input Pin	7V
Supply Voltage	7V
Current at Output Pin	15 mA
Current at Power Supply Pin [4]	10 mA
Lead Temp. (Soldering, 10 sec.)	260°C
Storage Temperature Range	−65°C to +150°C
Junction Temperature	150°C

(1) Absolute Maximum Ratings indicate limits beyond which damage to the device may occur. Operating Ratings indicate conditions for which the device is intended to be functional, but specific performance is not ensured. For ensured specifications and the test conditions, see DC ELECTRICAL CHARACTERISTICS and AC ELECTRICAL CHARACTERISTICS.
(2) If Military/Aerospace specified devices are required, please contact the Texas Instruments Sales Office/Distributors for availability and specifications.
(3) Human body model, 1.5 kΩ in series with 100 pF. Machine model. 200Ω in series with 100 pF.
(4) Supply current measured at pins 1, 2, and 3. The 4.7 kΩ pull-up resistor on pin 7 is not tied to V_{DD}in this measurement.

OPERATING RATINGS[1]

Supply Voltage	1.5V to 6V
Junction Temperature Range	
LMC6953C	−40°C to +85°C
Thermal Resistance (θ_{JA})	
D Package	165°C/W

(1) Absolute Maximum Ratings indicate limits beyond which damage to the device may occur. Operating Ratings indicate conditions for which the device is intended to be functional, but specific performance is not ensured. For ensured specifications and the test conditions, see DC ELECTRICAL CHARACTERISTICS and AC ELECTRICAL CHARACTERISTICS.

Copyright © 1998–2013, Texas Instruments Incorporated

DC ELECTRICAL CHARACTERISTICS

Unless otherwise specified, all **boldface** limits specified for T_J = −40°C to +85°C, V_{DD} = 5V, $R_{PULL-UP}$ = 4.7 kΩ and C_{EXT} = 0.01 µF. Typical numbers are room temperature (25°C) performance.

Symbol	Parameter	Conditions	Min	Typ	Max	Units
V_{H5}	V_{DD} Over-Voltage Threshold	T_J = 0°C to 70°C (1)	**5.45**	5.60	**5.75**	V
		T_J = −40°C to 85°C (1)	**5.30**	5.60	**5.90**	V
V_{L5}	V_{DD} Under-Voltage Threshold	T_J = 0°C to 70°C (1)	**4.25**	4.40	**4.55**	V
		T_J = −40°C to 85°C (1)	**4.10**	4.40	**4.70**	V
$V_{H3.3}$	3.3V Over-Voltage Threshold	T_J = 0°C to 70°C (2)	**3.80**	3.95	**4.10**	V
		T_J = −40°C to 85°C (2)	**3.60**	3.95	**4.30**	V
$V_{L3.3}$	3.3V Under-Voltage Threshold	T_J = 0°C to 70°C (2)	**2.50**	2.65	**2.80**	V
		T_J = −40°C to 85°C (2)	**2.30**	2.65	**3.00**	V
V_{MR}	Manual RESET Threshold			2.50	**2.80**	V
V_{PF}	Power Failure Differential Voltage (3.3V Pin–5V Pin)	(3)		150	**300**	mV
R_{IN}	Input Resistance at 5V and 3.3V Pins			35		kΩ
V_{OL}	$\overline{\text{RESET}}$ Output Low	T_J = 0°C to 70°C V_{DD} = 1.5V to 6V		0.05	**0.10**	V
		T_J = −40°C to 85°C V_{DD} = 1.55V to 6V				
I_S	Supply Current	(4)		0.8	**1.50**	mA

(1) PCI Specifications Revision 2.1, Section 4.2.1.1 and Section 4.3.2.
(2) PCI Specifications Revision 2.1, Section 4.2.2.1 and Section 4.3.2.
(3) PCI Specifications Revision 2.1 and Section 4.3.2.
(4) Supply current measured at pins 1, 2, and 3. The 4.7 kΩ pull-up resistor on pin 7 is not tied to V_{DD}in this measurement.

AC ELECTRICAL CHARACTERISTICS

Unless otherwise specified, all **boldface** limits specified for T_J = −40°C to 85°C, V_{DD} = 5V, $R_{PULL-UP}$ = 4.7 kΩ and C_{EXT} = 0.01 µF. Typical numbers are room temperature (25°C) performance.

Symbol	Parameter	Conditions	Typ	LMC6953 Limit	Units
t_D	Over or Under Voltage Response Time	(1)	150	**490**	ns max
t_{PF}	Power Failure Response Time	(2)	40	**90**	ns max
t_{RESET}	Reset Delay	C_{EXT} = 0.01 µF	100		ms

(1) PCI Specifications Revision 2.1, Section 4.3.2. The response time is measured individually with ±750 mV of overdrive applied to pin 2 then ±600 mV of overdrive applied to pin 3 and taking the worst number of the four measurements.
(2) PCI Specifications Revision 2.1, Section 4.3.2. The power failure response time is measured with a signal changing from 5V to 3V applied to pin 2 and a 3.3V DC applied to pin 3.

Copyright © 1998–2013, Texas Instruments Incorporated

LMC6953 TIMING DIAGRAM

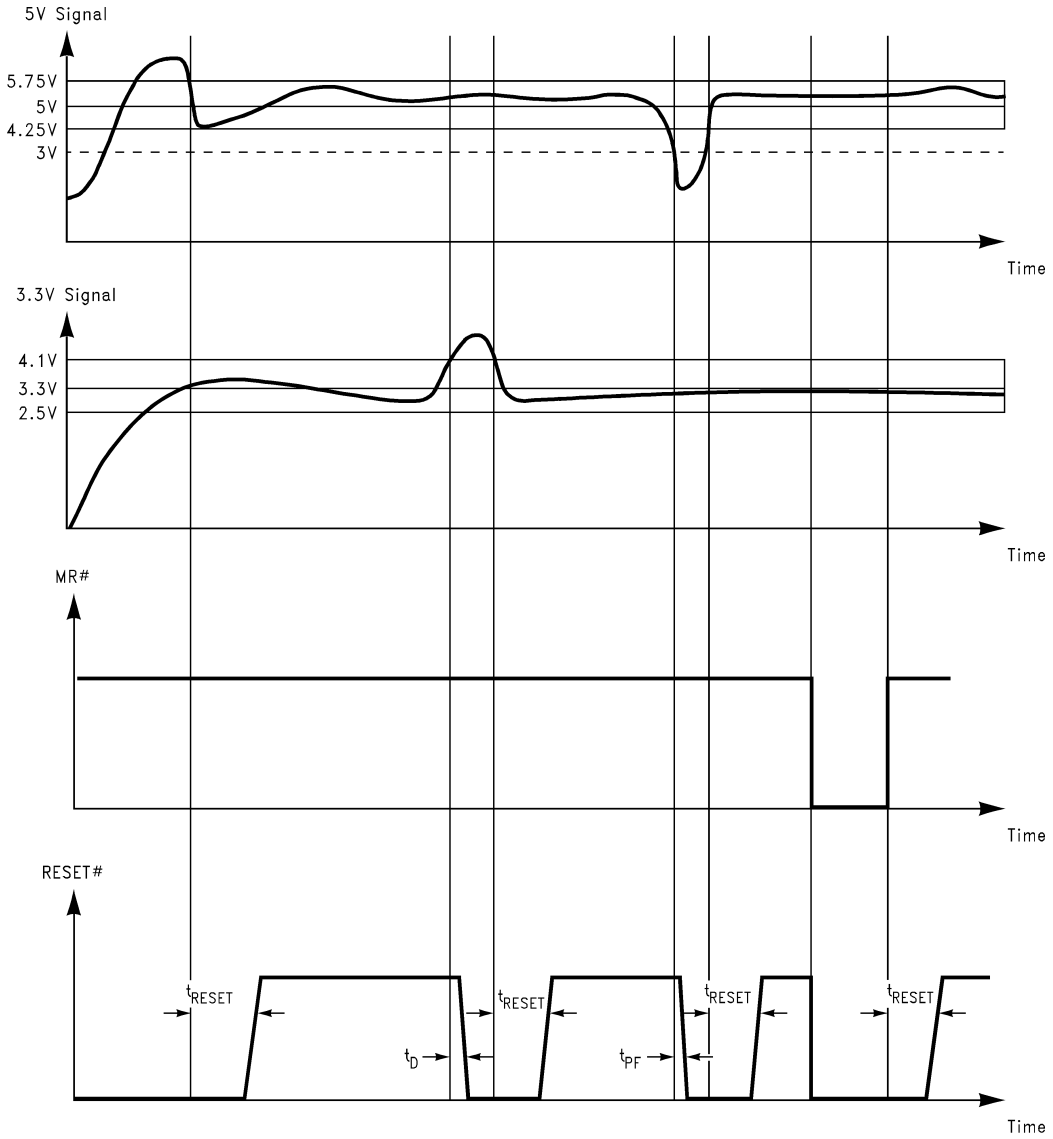

Note: t_{RESET}, t_D and t_{PF} are not to scale.

Copyright © 1998–2013, Texas Instruments Incorporated

TYPICAL PERFORMANCE CHARACTERISTICS

Unless otherwise specified, T_A = 25°C

Supply Current vs Temperature

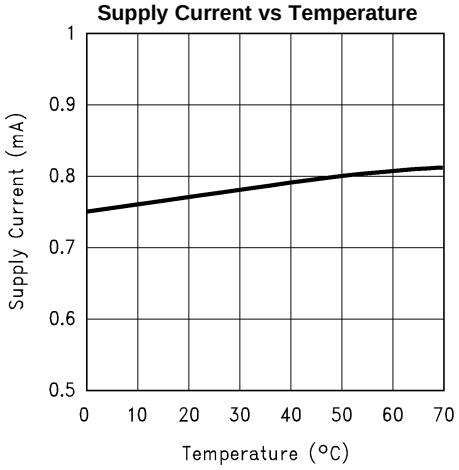

Figure 4.

Output Voltage vs Supply Voltage

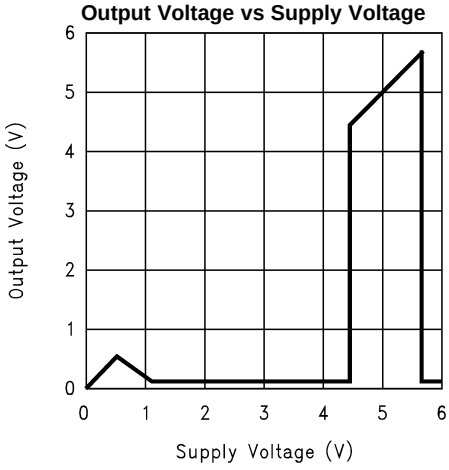

Figure 5.

Power-Up Supply Voltage vs Temperature

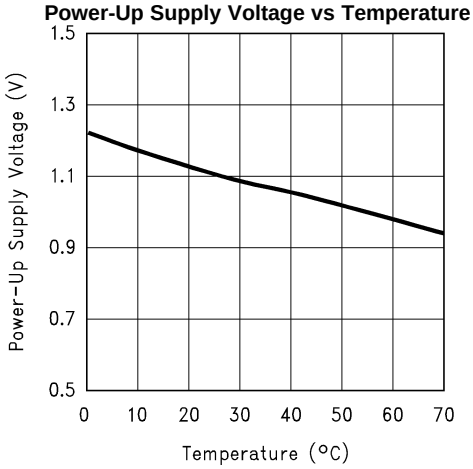

Figure 6.

V_{H5} vs Temperature

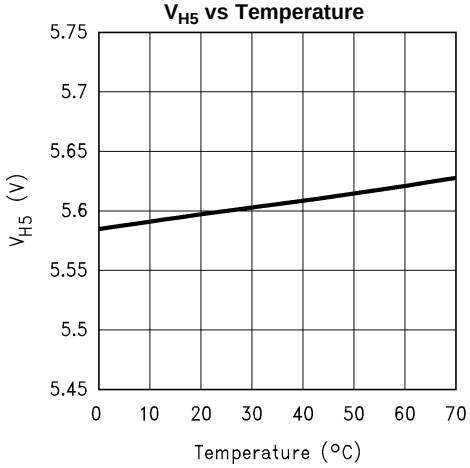

Figure 7.

V_{L5} vs Temperature

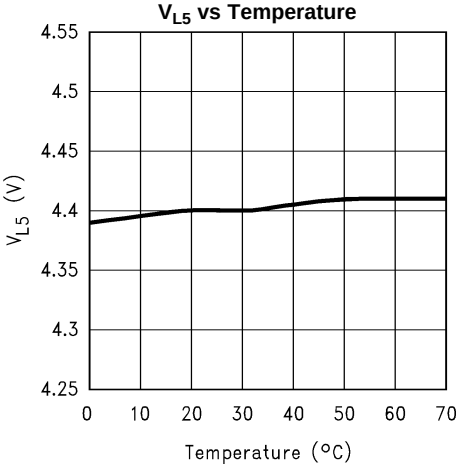

Figure 8.

$V_{H3.3}$ vs Temperature

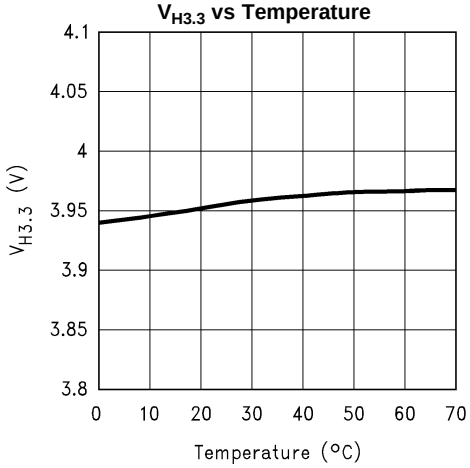

Figure 9.

Copyright © 1998–2013, Texas Instruments Incorporated

TYPICAL PERFORMANCE CHARACTERISTICS (continued)

Unless otherwise specified, T_A = 25°C

$V_{L3.3}$ vs Temperature

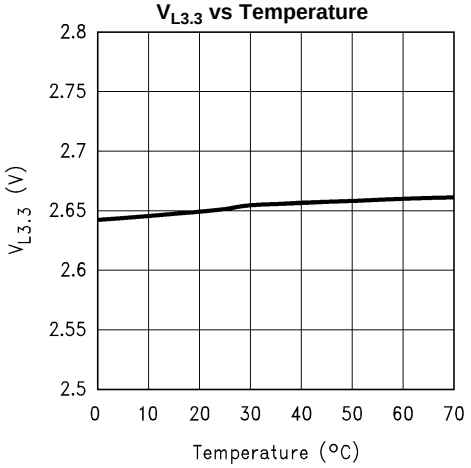

Figure 10.

Over-Voltage Response Time vs Temperature

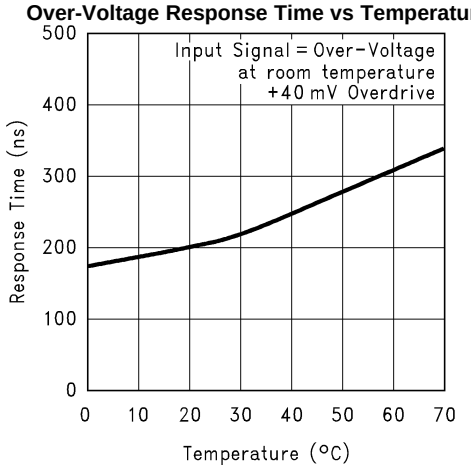

Figure 11.

3Under-Voltage Response Time vs Temperature

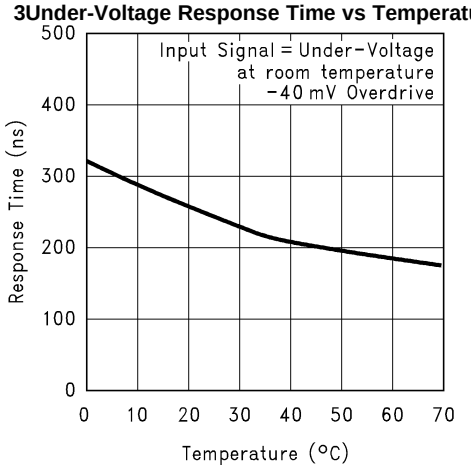

Figure 12.

Power Failure Response Time vs Temperature

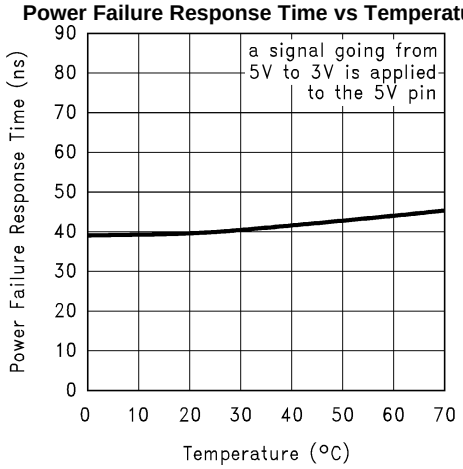

Figure 13.

V_{OL} vs $R_{PULL-UP}$

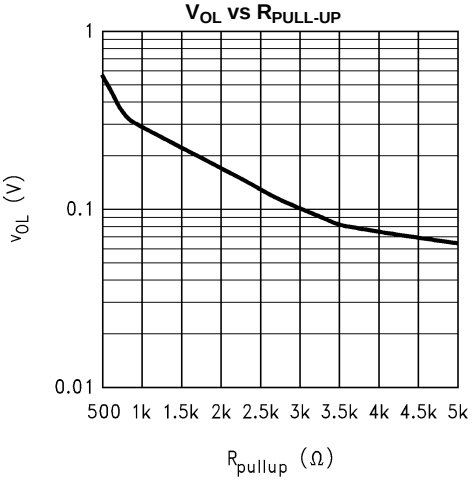

Figure 14.

I_{OL} vs $R_{PULL-UP}$

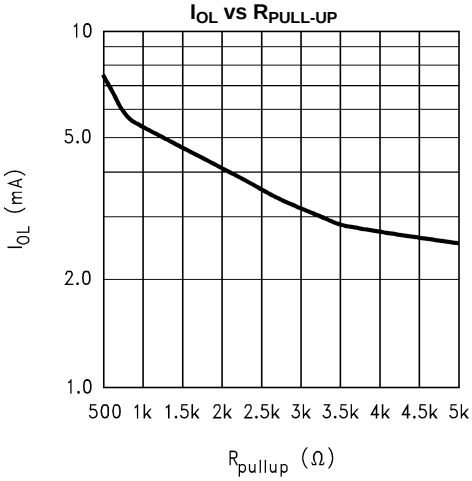

Figure 15.

Copyright © 1998–2013, Texas Instruments Incorporated

TYPICAL PERFORMANCE CHARACTERISTICS (continued)

Unless otherwise specified, T_A = 25°C

Reset Delay vs C_{EXT}

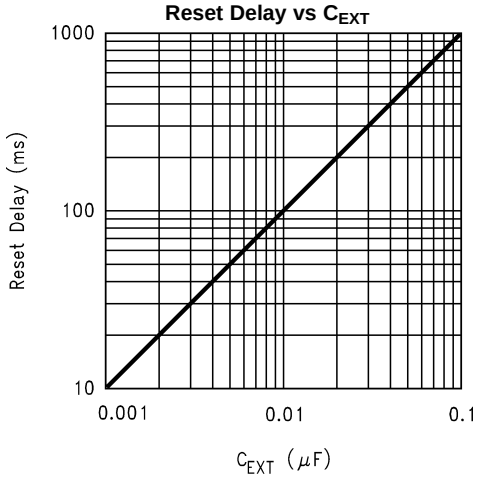

Figure 16.

Reset Delay vs Temperature with C_{EXT} = 0.01 µF

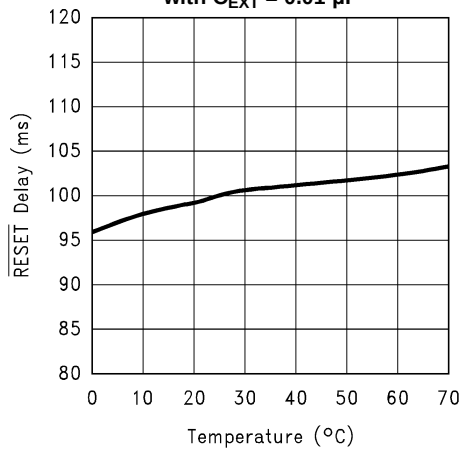

Figure 17.

BLOCK DIAGRAM OF THE LMC6953

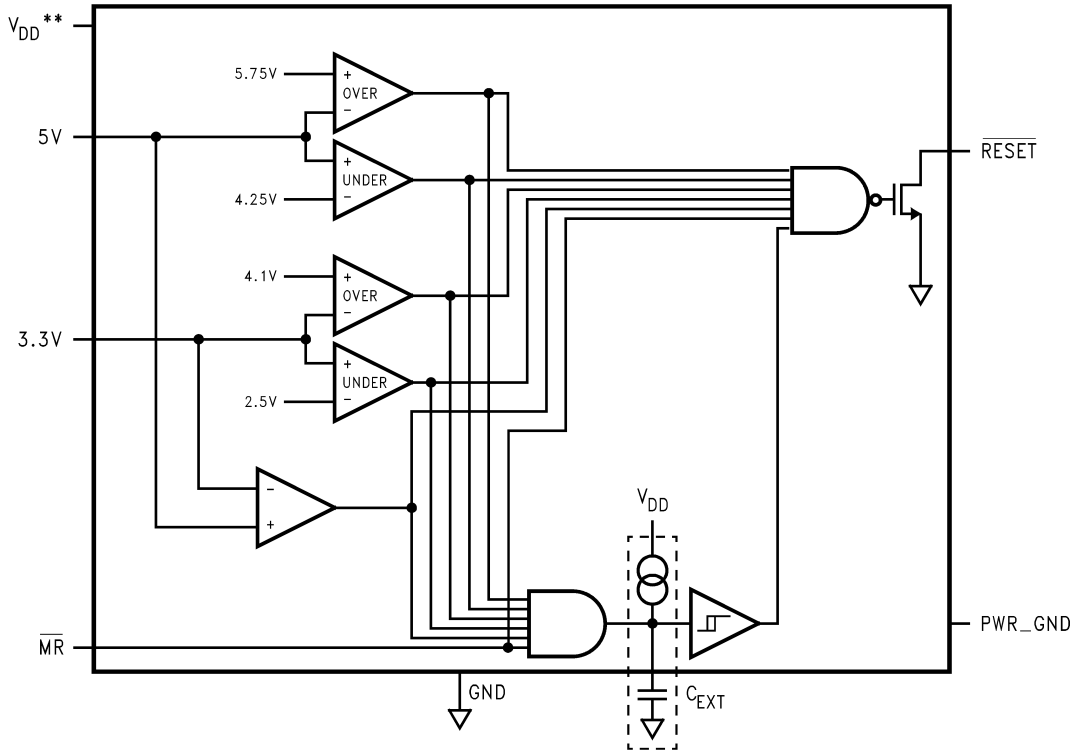

** All five comparators' positive power supplies are connected to V_{DD}

TRUTH TABLE(1)

Power Failure	5V Over-Voltage	5V Under-Voltage	3.3V Over-Voltage	3.3V Under-Voltage	$\overline{MR}$	$\overline{RESET}$
Fail	X	X	X	X	High	Low
X	Fail	X	X	X	High	Low
X	X	Fail	X	X	High	Low
X	X	X	Fail	X	High	Low
X	X	X	X	Fail	High	Low
X	X	X	X	X	Low	Low
OK	OK	OK	OK	OK	High	High

(1) X = Don't Care

PIN DESCRIPTION

Pin	Name	Function
1	V_{DD}	5V input supply voltage. This pin supplies power to the internal comparators. It can be connected to a capacitor acting as a back-up battery. Otherwise, it should be shorted to the 5V pin.
2	5V	5V input supply voltage. This pin is not connected to the positive power supply of the internal comparators. It provides input signal to the 5V window comparators as well as the power failure comparator.
3	3.3V	3.3V input supply voltage. This pin provides input signal to the 3.3V window comparators and the power failure comparator.
4	$\overline{MR}$	Manual reset input pin. It takes 5V CMOS logic low and triggers $\overline{RESET}$. If not used, this pin should be connected to V_{DD}.
5	PWR—GND	Ground.
6	GND	This pin should be grounded at all times.
7	$\overline{RESET}$	Active low reset output. $\overline{RESET}$ holds low for 100 ms after both 5V and 3.3V powers recover, or after manual reset signal returns to high state.
8	C_{EXT}	External capacitor pin. The value of C_{EXT} sets the reset delay.

Copyright © 1998–2013, Texas Instruments Incorporated

APPLICATION NOTE

HOW THE LMC6953 FUNCTIONS

The LMC6953 is a power supply supervisor with its performance specifications compliant to PCI Specifications Revision 2.1. The chip monitors power-up, power-down, brown-out, power failure and manual reset interrupt situations.

During power-up, the LMC6953 holds $\overline{\text{RESET}}$ low for 100 ms after both 5V and 3.3V are within specified windows. It asserts reset in 490 ns when a brown-out is detected. Brown-out occurs when 5V supply is above 5.75V over-voltage or below 4.25V under-voltage or when 3.3V supply is above 4.1V over-voltage or 2.5V under-voltage. In case of power failure where the 5V supply falls under 3.3V supply by 300 mV maximum, reset is asserted in 90 ns. $\overline{\text{RESET}}$ also can be asserted by sending a 5V CMOS logic low to the manual reset pin.

Each time $\overline{\text{RESET}}$ is asserted, it holds low for 100 ms after a fault condition is recovered. The 100 ms reset delay is generated by the 0.01 µF C_{EXT} capacitor, and can be adjusted by changing the value of C_{EXT}.

It is highly recommended to place lands on printed circuit boards for 120 pF capacitors between pin 2 and ground and also between pin 3 and ground. As power supplies may change abruptly, there can be very high frequency noise present and the capacitors can minimize the noise,

MINIMUM SUPPLY VOLTAGE FOR $\overline{\text{RESET}}$ ASSERTION

The LMC6953 specifies V_{DD} = 1.55V as the minimum supply voltage to achieve consistent $\overline{\text{RESET}}$ assertion. This ensures system stability in initialization state.

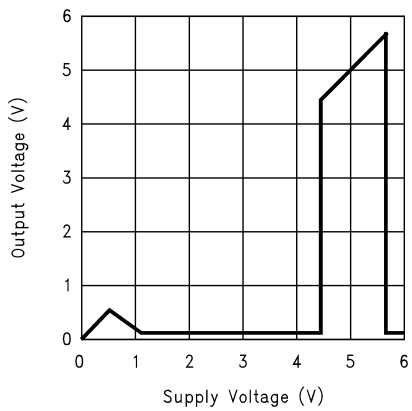

Figure 18. Output Voltage vs Supply Voltage

Figure 18 is measured by shorting pins 1, 2 and 3 together when supply voltage is from 0V to 3.3V. Then pin 3 is connected with a constant 3.3 V_{DC} and pins 1 and 2 are connected to a separate power supply that continues to vary from 3.3V to 6V.

5V AND V_{DD} PINS

By having the 5V and the V_{DD} pins separate, a capacitor can be used as a back-up power supply in event of a sudden power supply failure. This circuit is shown in Figure 22. Under normal condition, the diode is forward-biased and the capacitor is charged up to V_{DD} − 0.7V. If the power supply goes away, the diode becomes reverse-biased, isolating the 5V and the V_{DD} pins. The capacitor provides power to the internal comparators for a short duration for the LMC6953 to operate.

C_{EXT} SETS RESET DELAY IN LINEAR FASHION

The LMC6953 has internal delay circuitry to generate the reset delay. By choosing different values of capacitor C_{EXT}, reset delay can be programmed to the desired length for the system to stabilize after a fault condition occurs.

Copyright © 1998–2013, Texas Instruments Incorporated

EVALUATING THE LMC6953

To Measure Over-Voltages And Under-Voltages

Connect a 3.3V DC to the 3.3V pin and a 5V DC to the V_{DD} and the 5V pins (V_{DD} and 5V pins are shorted). $\overline{\text{RESET}}$ output is high because voltages are within window. These voltages should be monitored. While keeping the 3.3V constant, increase the 5V DC signal until a $\overline{\text{RESET}}$ low is detected. The point on the 5V DC signal at which $\overline{\text{RESET}}$ changes from high to low is the 5V over-voltage. It is typically 5.6V. To detect 5V under-voltage, start the 5V DC signal from 5V and decrease it until a $\overline{\text{RESET}}$ low is detected. The point on the 5V DC signal at which $\overline{\text{RESET}}$ changes from high to low is the 5V under-voltage. It is typically 4.4V.

To find 3.3V over-voltage and under-voltage, keep the 5V DC at 5V and vary the 3.3V DC signal until a $\overline{\text{RESET}}$ low is detected.

To Measure Timing Specifications

For evaluation purposes only, the V_{DD} and the 5V pins should have separate signals. It is easier to measure response time in this manner. The V_{DD} pin is connected to a steady 5V DC and the 5V pin is connected to a pulse generator. To simulate the power supply voltages going out of window, a pulse generator with disable/enable feature and rise and fall time adjustment is recommended. To measure the $\overline{\text{RESET}}$ signal, a oscilloscope is recommended because of its ability to capture and store a signal.

To measure the 5V under-voltage response time on the LMC6953, set the pulse generator to trigger mode and program the amplitude to have a high value of 5V and a low value of the 5V under-voltage threshold measured previously with 50 mV overdrive. For example, if the measured 5V under-voltage is 4.4V, then a 50 mV overdrive on this signal is 4.35V. The disable feature on the pulse generator should be on. Program the fall time of the pulse to be 30 ns and program the scope to trigger on the falling edge, with trigger level of 4.5V. Set the scope to 200 ns/division. The probes should be connected to the 5V pin and the $\overline{\text{RESET}}$ pin. Now enable the 5V signal from the pulse generator and trigger the signal. Be aware that when the signal is enabled, there is high frequency noise present, and putting a 120 pF capacitor between the 5V pin and ground suppresses some of the noise. Response time is measured by taking the 5V under-voltage threshold on the 5V signal to the point where $\overline{\text{RESET}}$ goes low. Figure 19 shows a scope photo of 5V under-voltage waveforms. It is taken with a signal going from 5V to 4.25V at the 5V pin.

To measure the 100 ms $\overline{\text{RESET}}$ delay, change the scope to 50 ms/division and trigger the 5V signal again. $\overline{\text{RESET}}$ should stay low for 100 ms after the 5V is recovered and within window.

Other over-voltages and under-voltages can be measured by changing the pulse generator to different voltage steps. Putting a 120 pF capacitor between the 3.3V pin and ground is recommended in evaluating 3.3V signal.

To measure power-failure response time, set the pulse generator from 5V to 3V with fall time of the pulse 3 ns and connect it to the 5V pin. $\overline{\text{RESET}}$ should go low within 90 ns of power failure. Figure 20 shows a scope photo of power failure waveforms. It is taken with a signal going from 5V to 3V at the 5V pin.

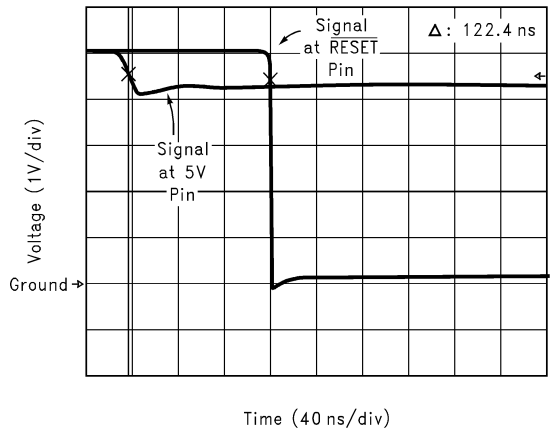

Figure 19. 5V Under-Voltage Waveforms

Copyright © 1998–2013, Texas Instruments Incorporated

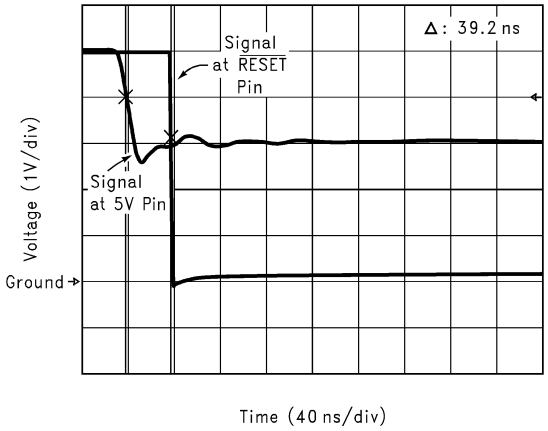

Figure 20. Power Failure Waveforms

Typical Application Circuits

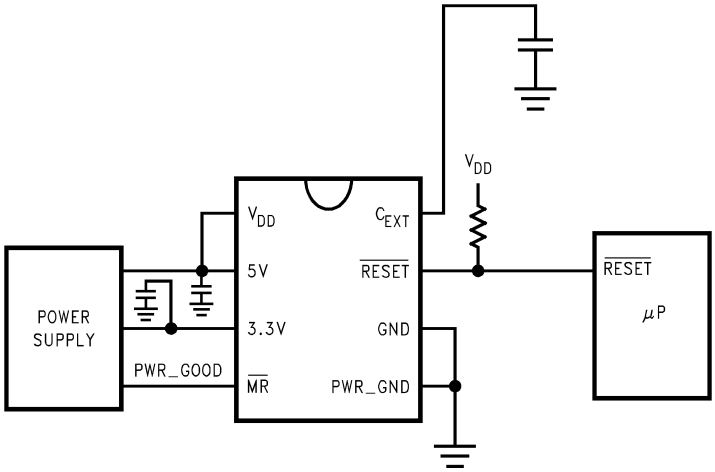

Figure 21. On Mother Board

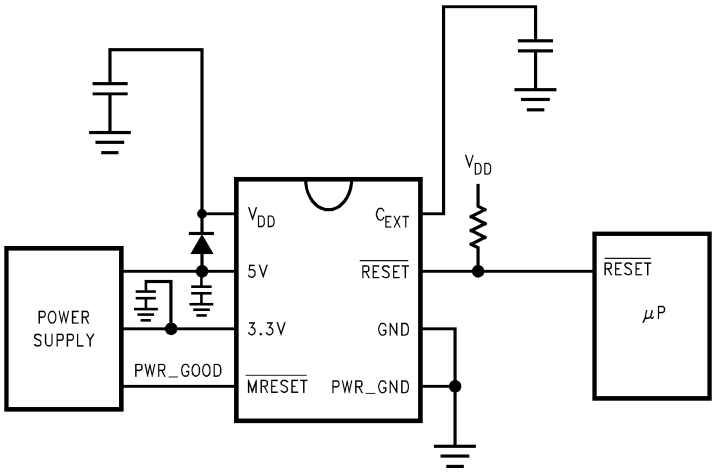

Figure 22. On Mother Board with Capacitor as a Back-up Power Supply

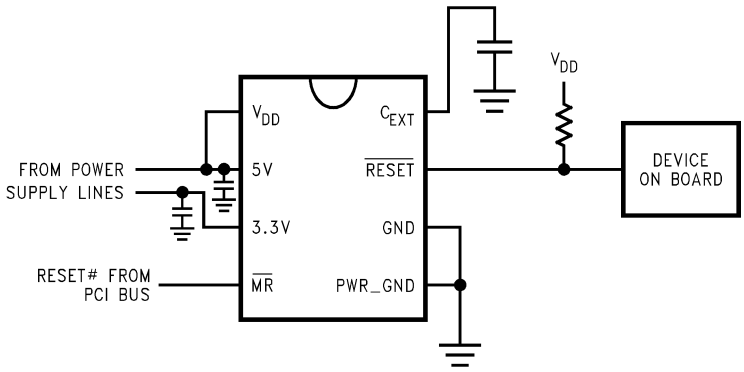

Figure 23. On Add-In Cards

Copyright © 1998–2013, Texas Instruments Incorporated

REVISION HISTORY

Changes from Revision C (April 2013) to Revision D	Page
• Changed layout of National Data Sheet to TI format	12

PACKAGING INFORMATION

Orderable Device	Status (1)	Package Type	Package Drawing	Pins	Package Qty	Eco Plan (2)	Lead/Ball Finish (6)	MSL Peak Temp (3)	Op Temp (°C)	Device Marking (4/5)	Samples
LMC6953CM/NOPB	NRND	SOIC	D	8	95	Green (RoHS & no Sb/Br)	CU SN	Level-1-260C-UNLIM	0 to 70	LMC69 53CM	
LMC6953CMX/NOPB	NRND	SOIC	D	8	2500	Green (RoHS & no Sb/Br)	CU SN	Level-1-260C-UNLIM	0 to 70	LMC69 53CM	

(1) The marketing status values are defined as follows:
ACTIVE: Product device recommended for new designs.
LIFEBUY: TI has announced that the device will be discontinued, and a lifetime-buy period is in effect.
NRND: Not recommended for new designs. Device is in production to support existing customers, but TI does not recommend using this part in a new design.
PREVIEW: Device has been announced but is not in production. Samples may or may not be available.
OBSOLETE: TI has discontinued the production of the device.

(2) **RoHS:** TI defines "RoHS" to mean semiconductor products that are compliant with the current EU RoHS requirements for all 10 RoHS substances, including the requirement that RoHS substance do not exceed 0.1% by weight in homogeneous materials. Where designed to be soldered at high temperatures, "RoHS" products are suitable for use in specified lead-free processes. TI may reference these types of products as "Pb-Free".
RoHS Exempt: TI defines "RoHS Exempt" to mean products that contain lead but are compliant with EU RoHS pursuant to a specific EU RoHS exemption.
Green: TI defines "Green" to mean the content of Chlorine (Cl) and Bromine (Br) based flame retardants meet JS709B low halogen requirements of <=1000ppm threshold. Antimony trioxide based flame retardants must also meet the <=1000ppm threshold requirement.

(3) MSL, Peak Temp. - The Moisture Sensitivity Level rating according to the JEDEC industry standard classifications, and peak solder temperature.

(4) There may be additional marking, which relates to the logo, the lot trace code information, or the environmental category on the device.

(5) Multiple Device Markings will be inside parentheses. Only one Device Marking contained in parentheses and separated by a "~" will appear on a device. If a line is indented then it is a continuation of the previous line and the two combined represent the entire Device Marking for that device.

(6) Lead/Ball Finish - Orderable Devices may have multiple material finish options. Finish options are separated by a vertical ruled line. Lead/Ball Finish values may wrap to two lines if the finish value exceeds the maximum column width.

Important Information and Disclaimer: The information provided on this page represents TI's knowledge and belief as of the date that it is provided. TI bases its knowledge and belief on information provided by third parties, and makes no representation or warranty as to the accuracy of such information. Efforts are underway to better integrate information from third parties. TI has taken and continues to take reasonable steps to provide representative and accurate information but may not have conducted destructive testing or chemical analysis on incoming materials and chemicals. TI and TI suppliers consider certain information to be proprietary, and thus CAS numbers and other limited information may not be available for release.

In no event shall TI's liability arising out of such information exceed the total purchase price of the TI part(s) at issue in this document sold by TI to Customer on an annual basis.

TAPE AND REEL INFORMATION

REEL DIMENSIONS

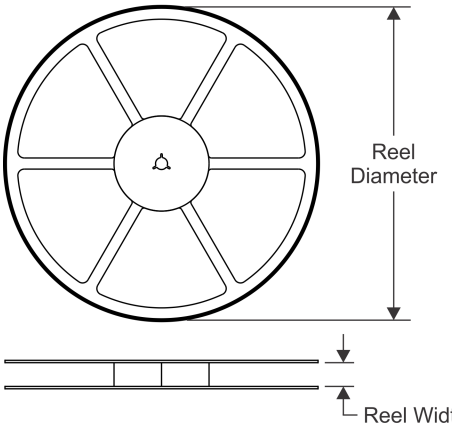

TAPE DIMENSIONS

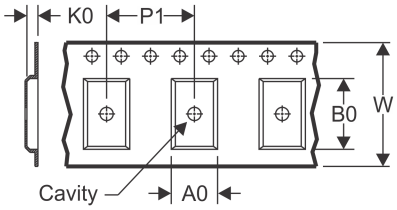

A0	Dimension designed to accommodate the component width
B0	Dimension designed to accommodate the component length
K0	Dimension designed to accommodate the component thickness
W	Overall width of the carrier tape
P1	Pitch between successive cavity centers

QUADRANT ASSIGNMENTS FOR PIN 1 ORIENTATION IN TAPE

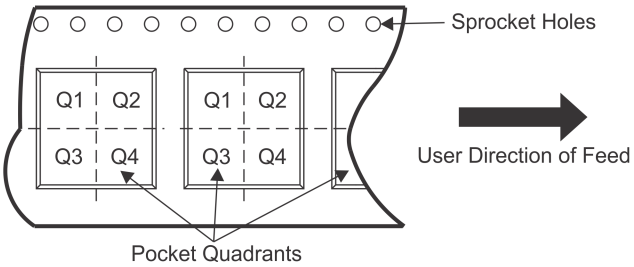

*All dimensions are nominal

Device	Package Type	Package Drawing	Pins	SPQ	Reel Diameter (mm)	Reel Width W1 (mm)	A0 (mm)	B0 (mm)	K0 (mm)	P1 (mm)	W (mm)	Pin1 Quadrant
LMC6953CMX/NOPB	SOIC	D	8	2500	330.0	12.4	6.5	5.4	2.0	8.0	12.0	Q1

TAPE AND REEL BOX DIMENSIONS

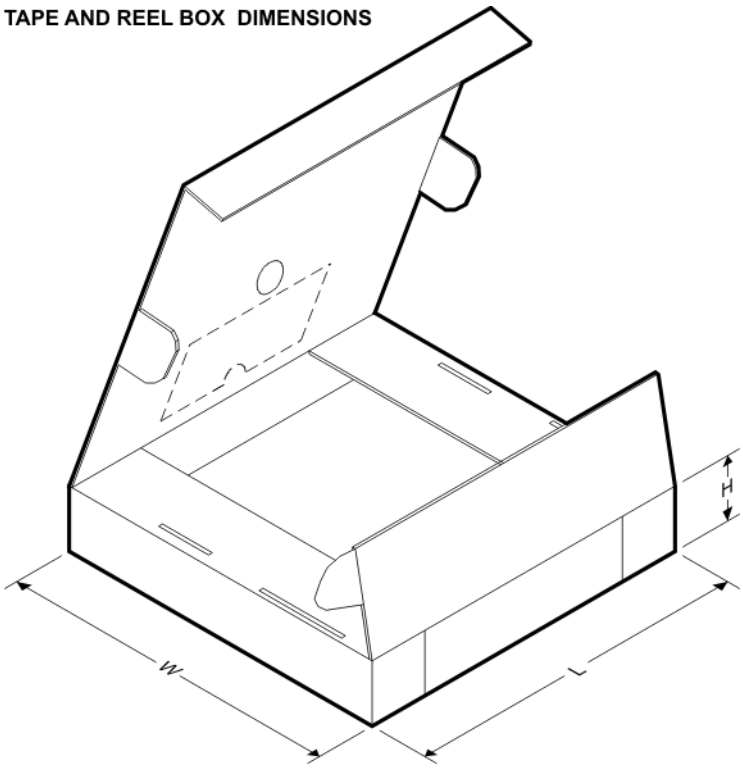

*All dimensions are nominal

Device	Package Type	Package Drawing	Pins	SPQ	Length (mm)	Width (mm)	Height (mm)
LMC6953CMX/NOPB	SOIC	D	8	2500	367.0	367.0	35.0

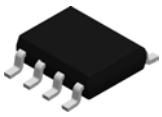

PACKAGE OUTLINE

D0008A

SOIC - 1.75 mm max height

SMALL OUTLINE INTEGRATED CIRCUIT

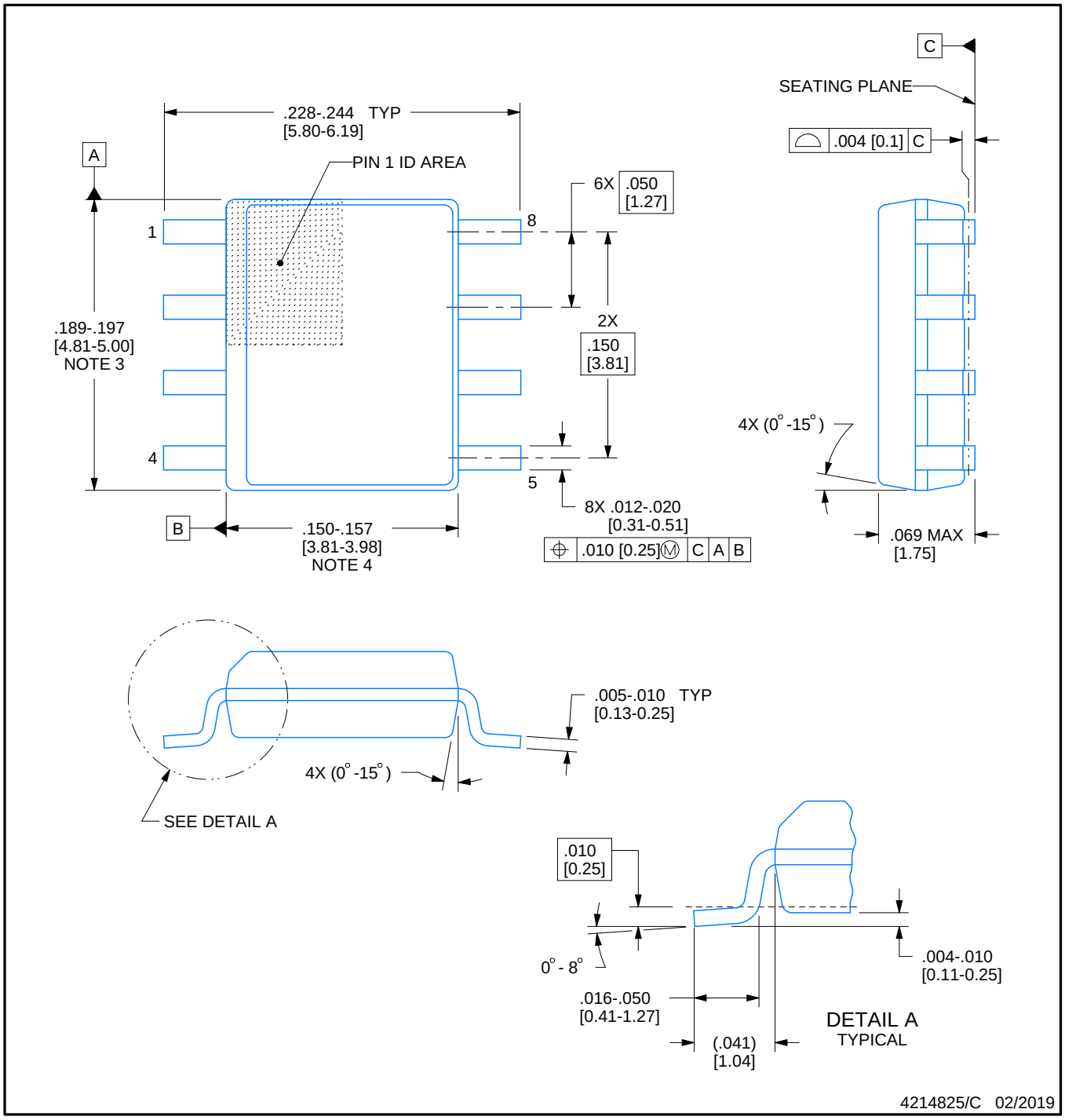

NOTES:

1. Linear dimensions are in inches [millimeters]. Dimensions in parenthesis are for reference only. Controlling dimensions are in inches. Dimensioning and tolerancing per ASME Y14.5M.
2. This drawing is subject to change without notice.
3. This dimension does not include mold flash, protrusions, or gate burrs. Mold flash, protrusions, or gate burrs shall not exceed .006 [0.15] per side.
4. This dimension does not include interlead flash.
5. Reference JEDEC registration MS-012, variation AA.

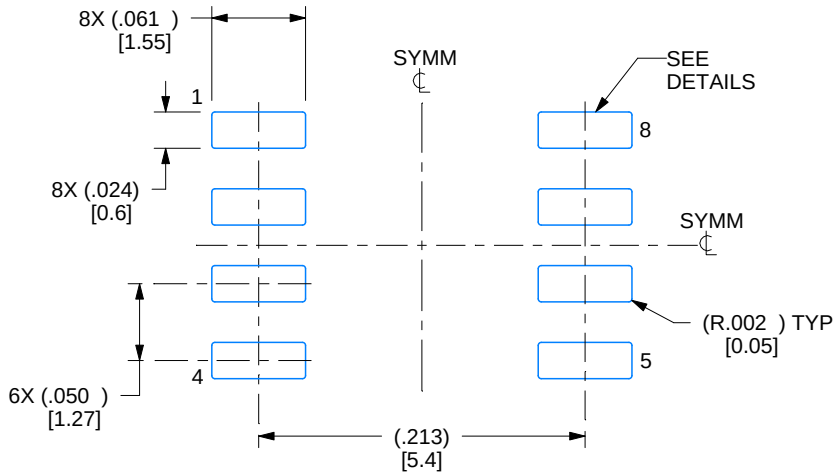

LAND PATTERN EXAMPLE
EXPOSED METAL SHOWN
SCALE:8X

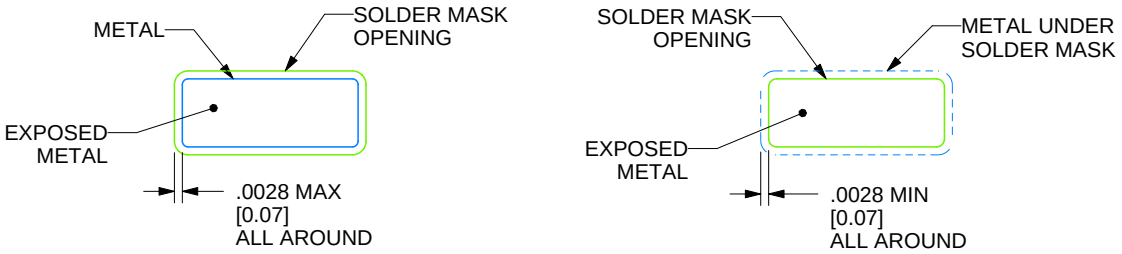

SOLDER MASK DETAILS

4214825/C 02/2019

NOTES: (continued)

6. Publication IPC-7351 may have alternate designs.
7. Solder mask tolerances between and around signal pads can vary based on board fabrication site.

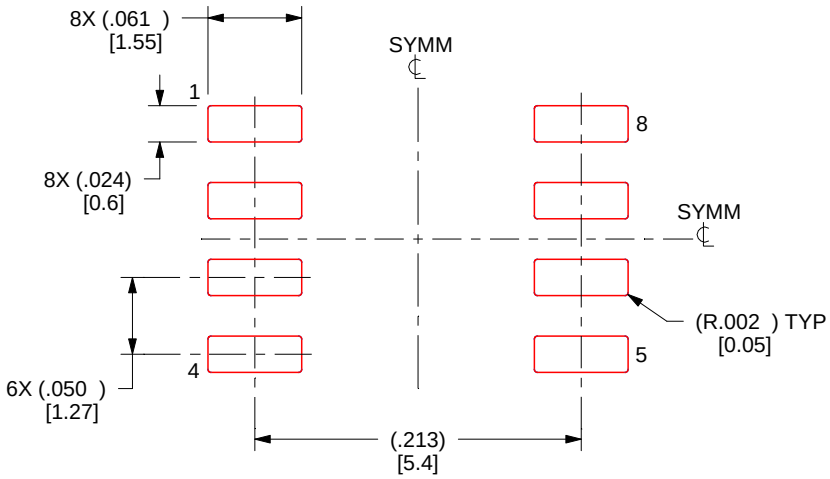

SOLDER PASTE EXAMPLE
BASED ON .005 INCH [0.125 MM] THICK STENCIL
SCALE:8X

4214825/C 02/2019

NOTES: (continued)

8. Laser cutting apertures with trapezoidal walls and rounded corners may offer better paste release. IPC-7525 may have alternate design recommendations.
9. Board assembly site may have different recommendations for stencil design.

IMPORTANT NOTICE AND DISCLAIMER

TI PROVIDES TECHNICAL AND RELIABILITY DATA (INCLUDING DATASHEETS), DESIGN RESOURCES (INCLUDING REFERENCE DESIGNS), APPLICATION OR OTHER DESIGN ADVICE, WEB TOOLS, SAFETY INFORMATION, AND OTHER RESOURCES “AS IS” AND WITH ALL FAULTS, AND DISCLAIMS ALL WARRANTIES, EXPRESS AND IMPLIED, INCLUDING WITHOUT LIMITATION ANY IMPLIED WARRANTIES OF MERCHANTABILITY, FITNESS FOR A PARTICULAR PURPOSE OR NON-INFRINGEMENT OF THIRD PARTY INTELLECTUAL PROPERTY RIGHTS.

These resources are intended for skilled developers designing with TI products. You are solely responsible for (1) selecting the appropriate TI products for your application, (2) designing, validating and testing your application, and (3) ensuring your application meets applicable standards, and any other safety, security, or other requirements. These resources are subject to change without notice. TI grants you permission to use these resources only for development of an application that uses the TI products described in the resource. Other reproduction and display of these resources is prohibited. No license is granted to any other TI intellectual property right or to any third party intellectual property right. TI disclaims responsibility for, and you will fully indemnify TI and its representatives against, any claims, damages, costs, losses, and liabilities arising out of your use of these resources.

TI’s products are provided subject to TI’s Terms of Sale (www.ti.com/legal/termsofsale.html) or other applicable terms available either on ti.com or provided in conjunction with such TI products. TI’s provision of these resources does not expand or otherwise alter TI’s applicable warranties or warranty disclaimers for TI products.

Mailing Address: Texas Instruments, Post Office Box 655303, Dallas, Texas 75265
Copyright © 2020, Texas Instruments Incorporated